DIGITEL High Volume Sampler DHA-80
Dimensioned Drawing Box Housing

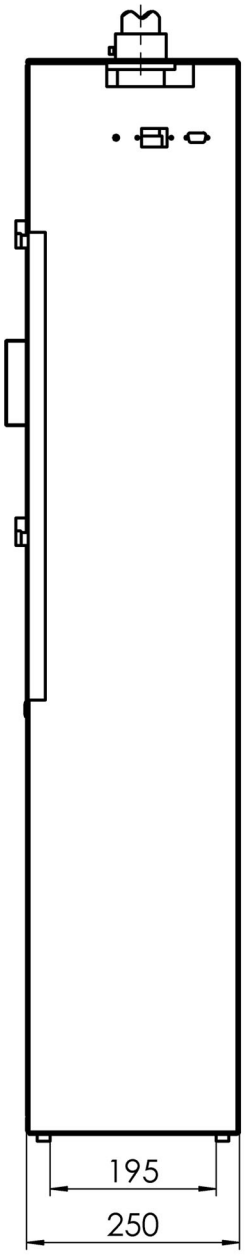

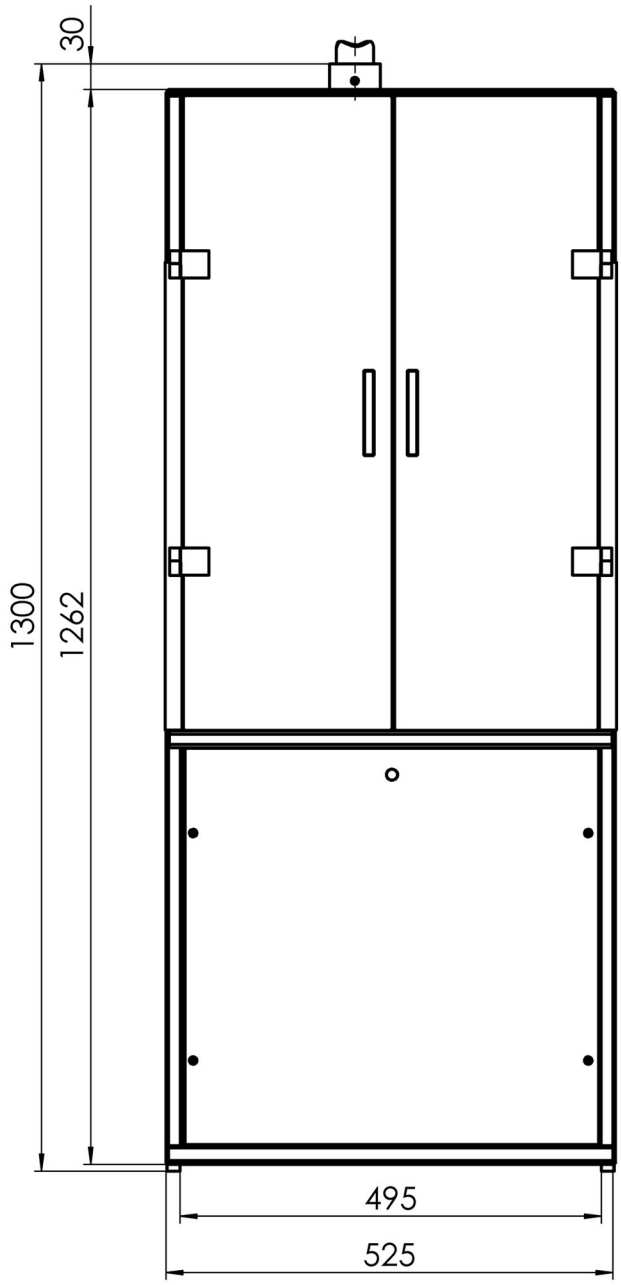

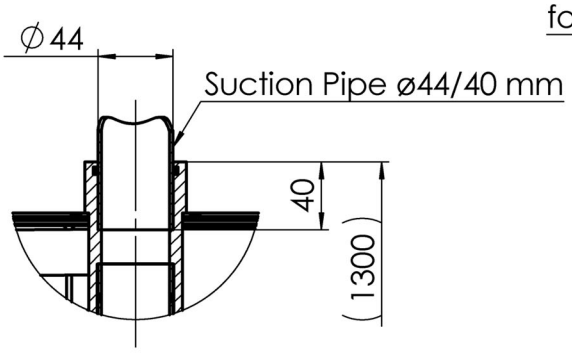

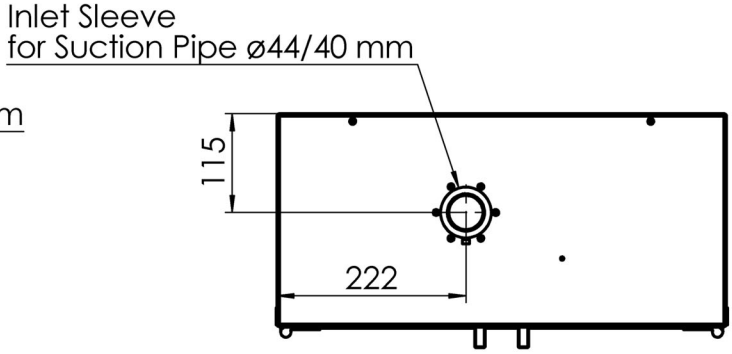

DIGITEL enviro-sense
DIGITEL Elektronik AG
alte Gasse 18
CH-8604 Hegnau
Telefon +41 (44) 9082030
digitel@digitel-ag.com
www.digitel-ag.com
Telefax +41 (44) 9082031
MWST-Nr. 417379
Werkstatt: Gartenweg 2, Hegnau